WEST-COAST.CREDIT.UNION	JOB NUMBER : .
ANYWHERE,U.S.A	DRAWING DATE : 9/9/04
STORAGE:210	DRAWN BY : KP
.	PROJ. MANAGER : CAP
	GRADE : PREMIUM
	DATE SUBMITTED : .
	RELEASED BY : .
	PROJ. ENGINEER : .
	REVISIONS : .
	RELEASED STAMP

CAD SHOP DRAWINGS
Anaheim, California 92804
ARCHITECTURAL WOODWORK INSTITUTE
CAD SHOP DRAWINGS

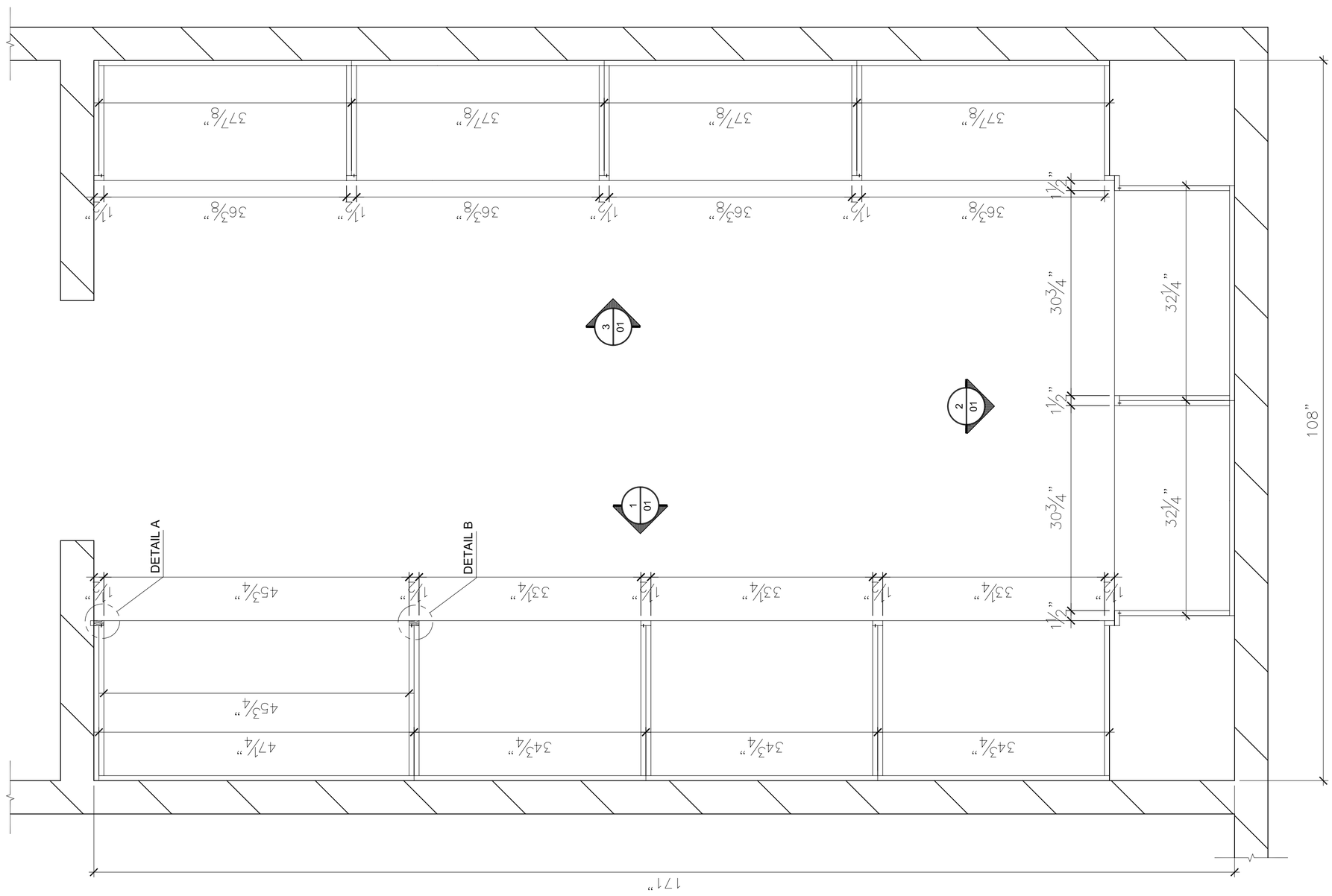

PLAN SECTION 1
SCALE : 1"=1'-0"

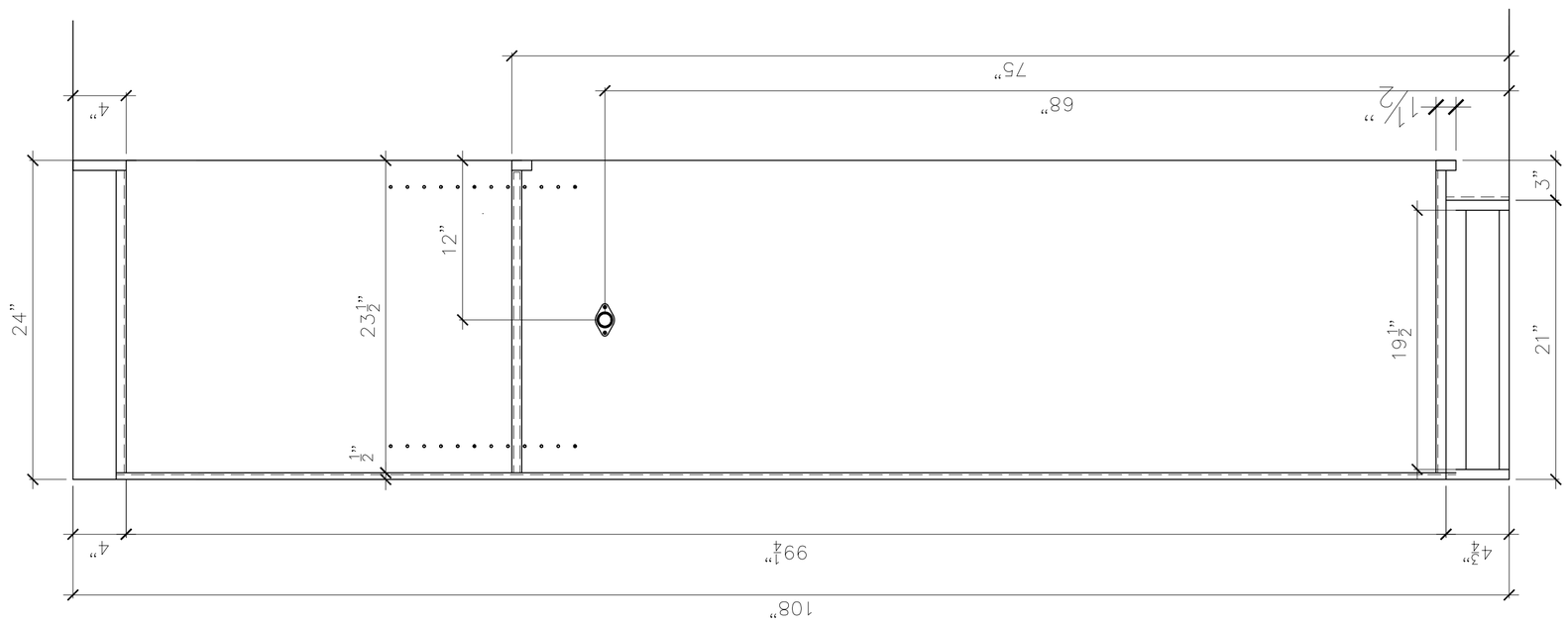

CROSS SECTION 2
SCALE : 1-1/2"=1'-0"

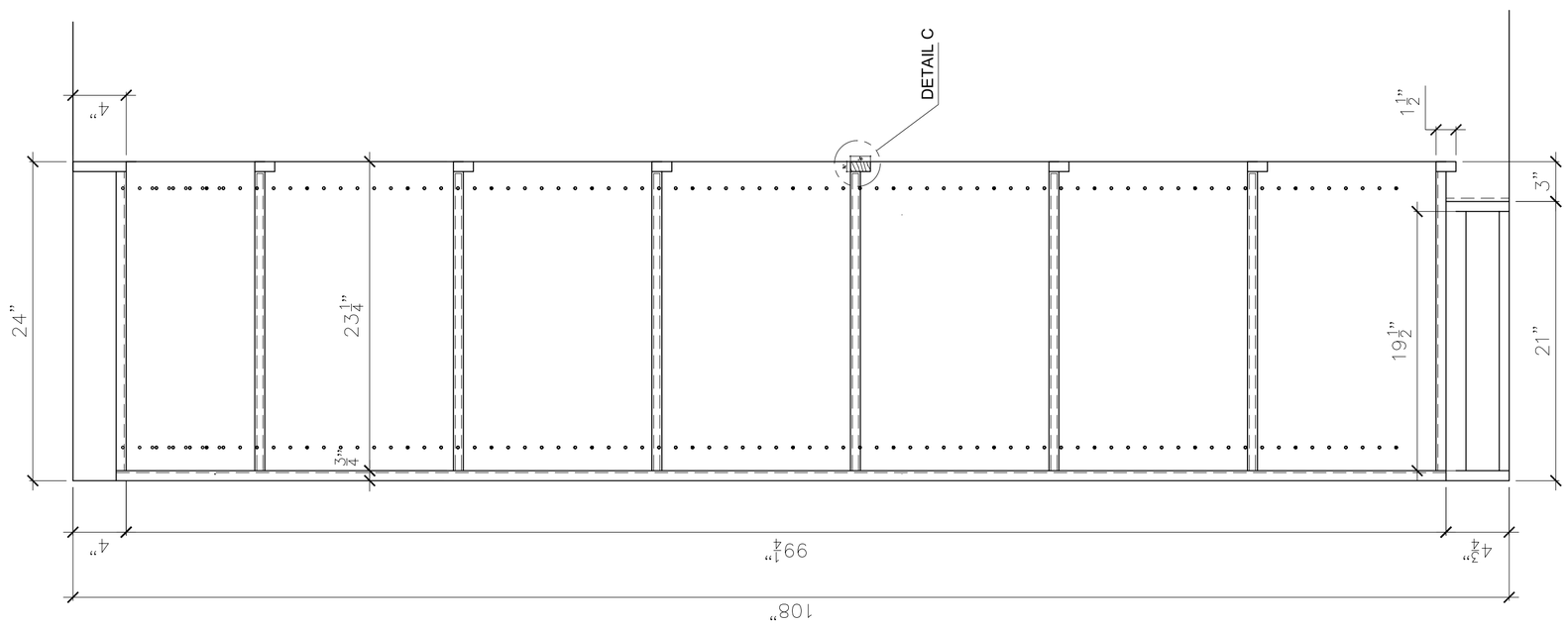

CROSS SECTION 3
SCALE : 1-1/2"=1'-0"

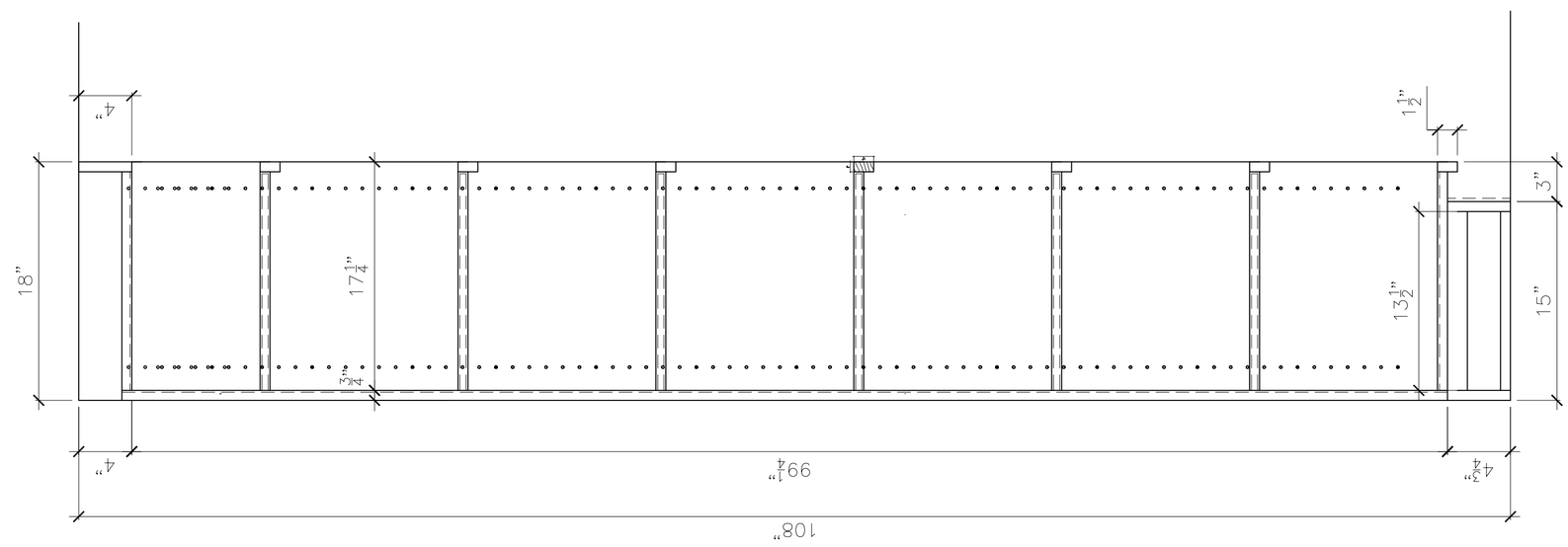

CROSS SECTION 4
SCALE : 1-1/2"=1'-0"