FINISH/MATERIAL SCHEDULE	
WO 3	ASH BURL VENEER FINISHED TO MATCH APPROVED SAMPLE
WO 4	ALDER SOLIDS FINISHED TO MATCH APPROVED SAMPLE

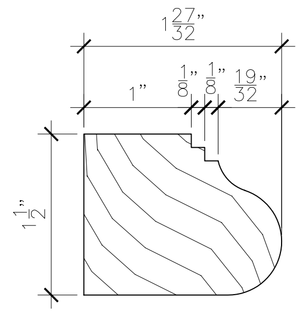

MOLDING #108a

F.S. DETAIL A

PLAN SECTION 4
SCALE : 1-1/2"=1'-0"

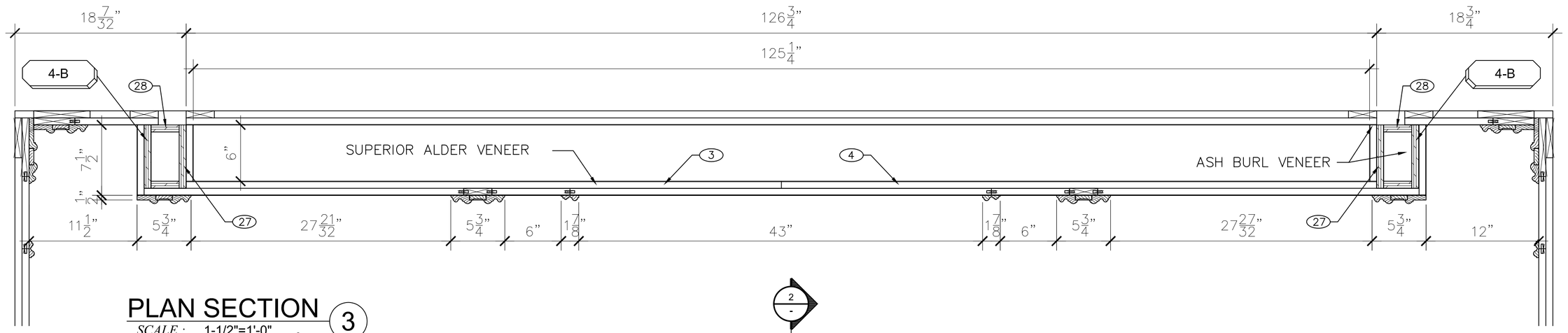

PLAN SECTION 3
SCALE : 1-1/2"=1'-0"

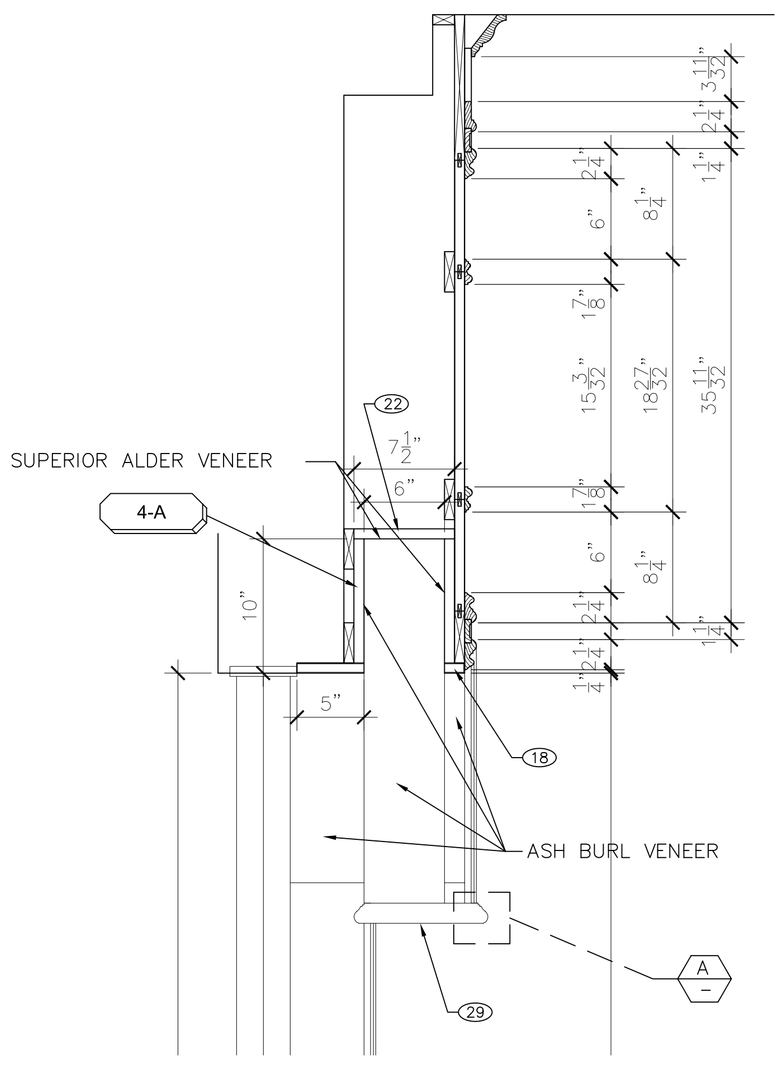

CROSS SECTION 2
SCALE : 1-1/2"=1'-0"

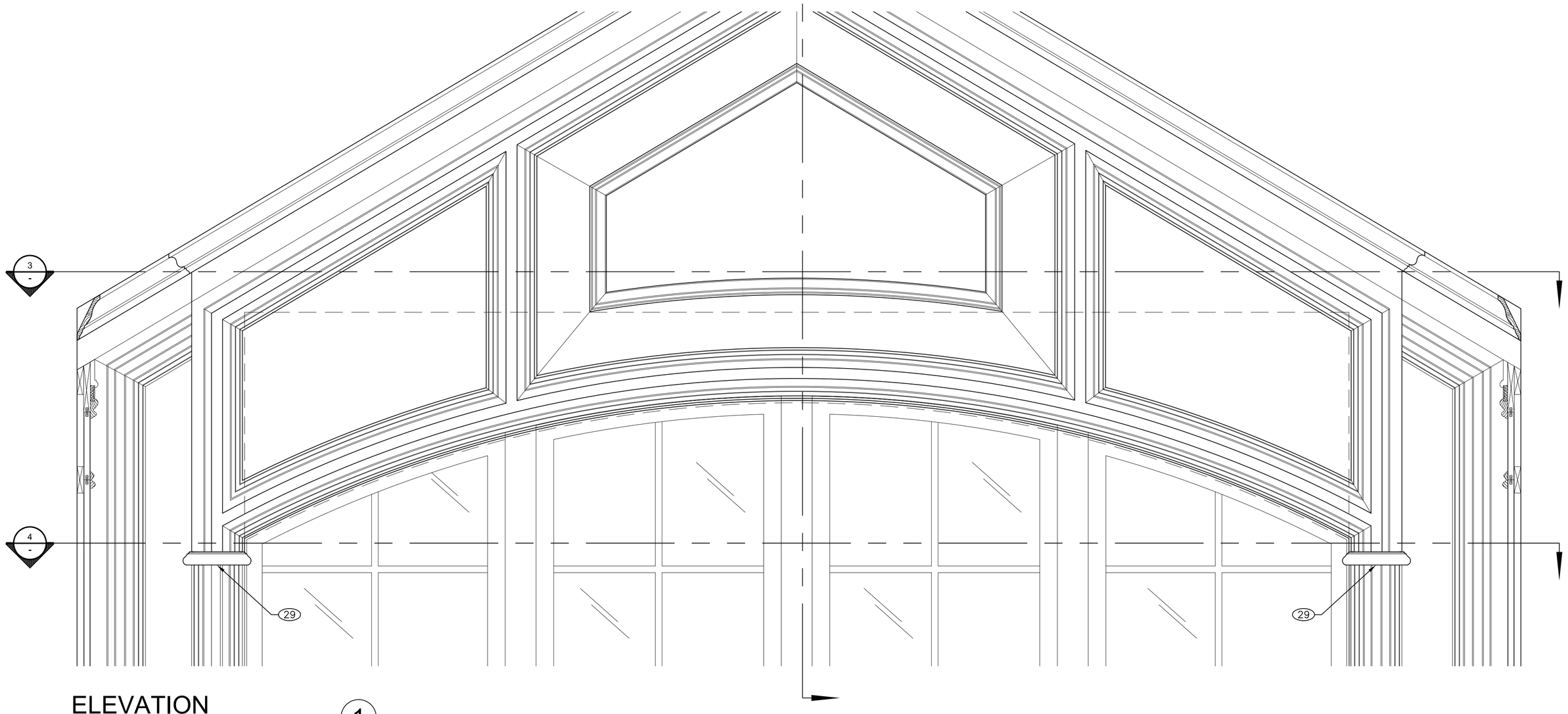

ELEVATION 1
SCALE : 1-1/2"=1'-0"

CAD SHOP DRAWINGS

CAD SHOP DRAWINGS

Anaheim, California 92804

ARCHITECTURAL WOODWORK INSTITUTE

RELEASED STAMP

REVISIONS :

GRADE : PREMIUM

JOB NUMBER :

DRAWING DATE : 9/9/04

DATE SUBMITTED :

DRAWN BY : XP

RELEASED BY :

APPROVED BY : CAP

FILE :

GEORGE RESIDENCE
ANYWHERE,U.S.A
OFFICE:025
EAST_WALL.REDESIGN